BOSCHERT

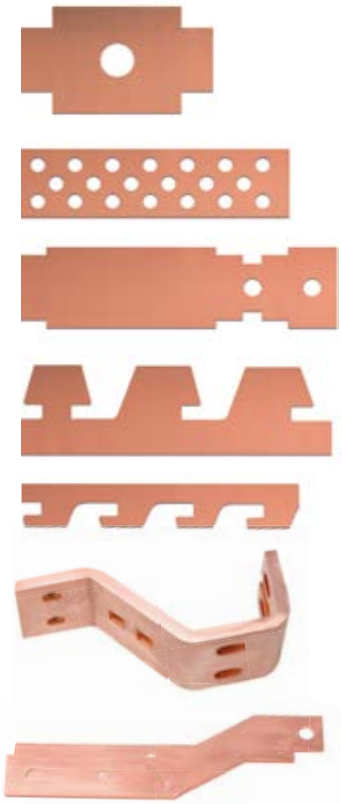

CuProfi
CuMaster
CNC-WP

by Stierli-Bieger

Punching
Nibbling
Forming
Marking
Tapping
Bending

BOSCHERT ORIGINAL

BOSCHERT CuProfi

The CUProfi is a specially designed machine for punching copper, aluminum and steel bar. The CUProfi is capable of using eight tools to process highly efficient and complete copper bars in lengths up to 4000 mm or 6000 mm and in thicknesses from 2 to 15 mm (optionally 20 mm).

Moreover, the machine has a separating tool station (60 x 8 mm), and with this, it is possible to accurately cut the copper bars to the desired length.
The copper bars may be 12-200 mm wide. The material is fed by clamps gripping the bar from each side, resulting in flat and straight parts with nearly no waste.

Feed table with rollers

Optional threading from M3 to M16. Three thread diameters can be in operation simultaneously.

Easy tool change

It is important that the copper bars are clamped both in front and behind the punch head to avoid twisting and bending of the material. Finished parts are pulled to an unload table by the feed mechanisim. Short and/or long parts require no intermediate handling.

Control panel

10,5” TFT color screen, ergonomically designed, is adjustable and mounted on casters. USB, dual palm bottons, tool change position button, emergency-off are all within easy reach. The powerful graphic and conversational software guarantees simple and fast programming. It is also available as a remote PC version.

Tools of CU Profi: Beta V2, lead screw, thread holders, cutting tool 60x8 mm.

BOSCHERT CuMaster

With the CuMaster, ***BOSCHERT*** offers a universal solution for copper processing. This machine can punch copper up to 305mm wide and 20mm thick material. All 8 stations can be equipped with 8-way (D. 16 mm) or 3-way (D. 31.7 mm) Multitools.

Additionally, the CuMaster could also have a 200x8 mm cutting station. The clamp width is automatically adjustable and can be moved on both sides in the X direction. This enables processing without a leftover piece.

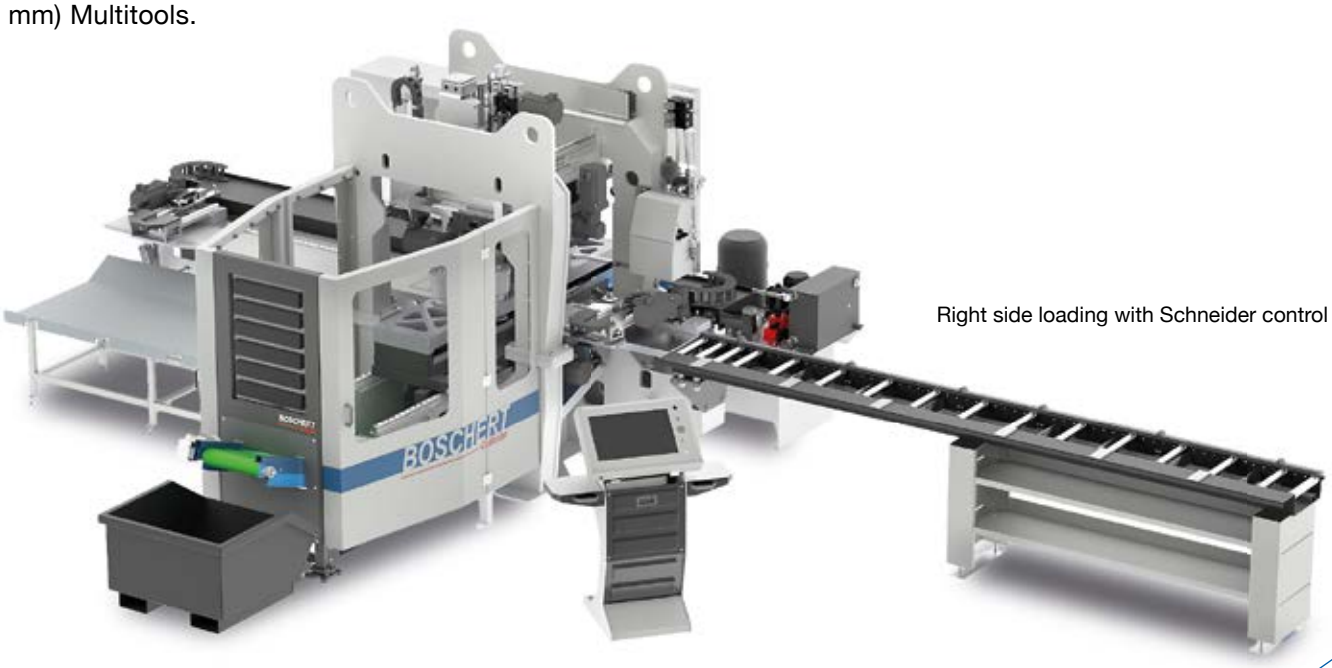

Right side loading with Schneider control

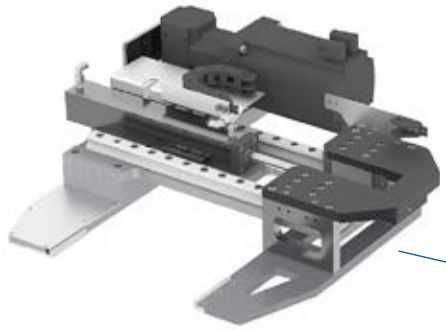

Automatic movable clamps

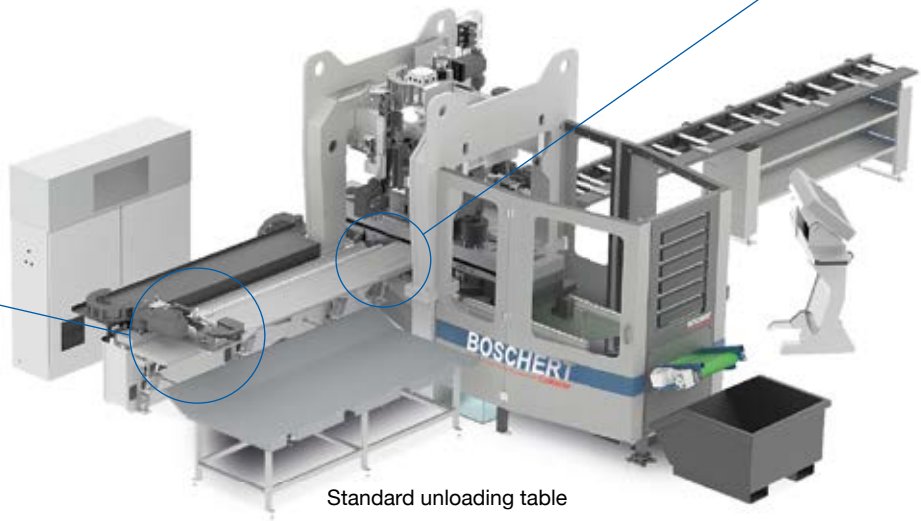

Standard unloading table

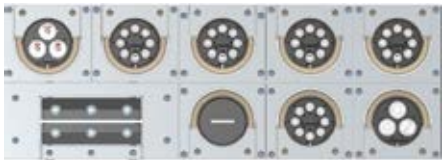

Possible tool set up with 48 tools

Working range

Multitool 8-way (16 mm max.)
Multitool 3-way (31,7 mm max.)

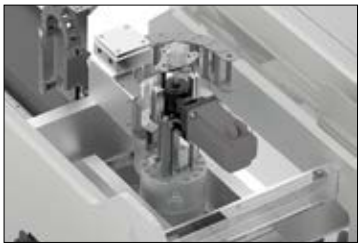

Two-stage punching cylinder
- Slow stroke with 600 KN power
- Fast stroke with 220 KN power

Options

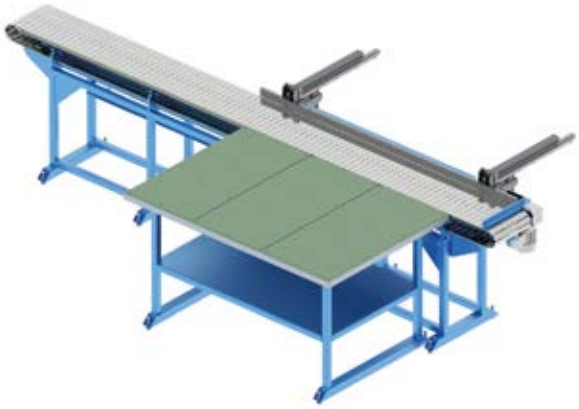

Unloading table with hinge conveyor and pusher

Small parts drop table

CUProfi and CuMaster marking unit: for labeling of finished parts

CUProfi and CuMaster loader. For automatic loading with pneumatic suction arms (4 oder 6 mm)

Up to 3 embossing cylinder with 60 KN power

Technical Data

	CuProfi	CuMaster
Maximum dimensions of work piece		
Length	4000 mm / 150“ (Option 6000 mm / 240“)	4000 mm / 150“
Width	15-200 mm 0.6-8“	15-305 mm 0.6-12“
Thickness	3-20 mm 0.125-0.8“	3-20 mm 0,125“-0,8“
Punching force	1 x 400 KN (40 ton)	600 KN (60 ton) 220 KN (22 ton)
Speeds		
Max. axis	100 m/min	100 m/min
Max. stroke per minute at 3 mm copper with 0,5 mm pitch	100	120 (22 ton) 58 (60 ton)
Tooling		
Number of tool stations	8 (9)	8
Max. Number of punching tools	8 (9)	64
Tapping unit	yes	yes
System Amada special		
Max. Diameter	31,7 mm (B) / 1.25“ 50,8 mm (C) / 2.0“	88,9 mm / 3.5“
Multitool **3-Stations** with 3 x 31,7 mm	no	yes
Multitool **8-Stations** with 8 x 16 mm	no	yes
Parting tool	60x8 mm	200x8 mm (opt.)
LAN + USB	yes	yes
Online Support	yes	yes
Axes accuracy during punching process		
Positioning Accuracy	+ - 0,10 mm + - 0.004“	+ - 0,10 mm + - 0.004“
Repeatability	+ - 0,05 mm + - 0.002“	+ - 0,05 mm + - 0.002“
Space requirement and weights [1]		
Length	7000 mm / 24‘ 6“ (9000 mm) / (29‘ 6“)	8190 mm / 34‘ (10190 mm)
Width	3000 mm / 10‘	4775 mm
Height	2100 mm / 7‘	2364 mm
Weight	4000 kg 13.200 lbs	12.000 kg 26400 lbs
Electrical values		
Electrical connecting value	25 kVA	30 kVA
Hydraulic motor	11 kW / 15 HP	11 kW / 15 HP
Required fuse	3 x 35 A 35 Amp 3 phase	3 x 35 A 35 Amp 3 phase
Pneumatic connecting value	4 bar / 60 psi	4 bar / 60 psi
Hydraulic oil	160 Liter / 42 gal	160 Liter / 42 gal

[1] The exact values can be found in each specific installation plan.

Stierli-Bieger
CH-6210 SURSEE · SWITZERLAND

Stierli-Bieger Universal Bending Center

The Stierli-Bieger horizontal bender is a modern and powerful solution for the efficient fabrication of busbar.

The integrated angle correction automatically compensates for any spring back and differences in material, thus achieving extremely high precision and reliability. In addition to the measuring tools, many other tools including those for edgewise bending, offset bending and twist bending can be quickly and economically added.

Programming can be done at the machine with the simple yet powerful graphic control or by off-line systems used in conjunction with the Boschert punching systems.

HYBRID Technology

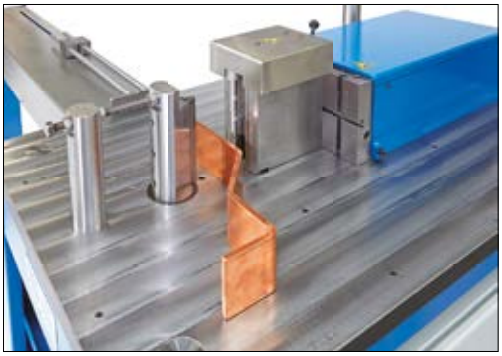

Measuring vee-block with automatic angle correction and bending without marks.

Modern graphic touch-screen control with conversational programming and integrated library of common shapes.

Technical data	220 CNC-WP	420 CNC-WP
Working force:	220 kN	420 kN
Tooling height:	150 mm	200 mm (250 mm)
Bending capacity:	150 x 16 mm	200 x 16 (20)
CNC-length stop:	1 m / 2m / 3m	1 m / 2m / 3m
Measuring vee-block:	up to thickness 20 mm	up to thickness 20 mm
Punch insert:	up to thickness 25 mm	up to thickness 30 mm
Offset bending tools:	2 different systems available	
Edgewise bending:	60 x 10 mm	100 x 10 mm
Twist bending:	60 x 10 mm	100 x 10 mm
Narrow section punch:	Height 150 mm	Height 200 mm
	Support system upwards or rearwards	
Programming:	At the machine through graphic, conversation control or by programming system. 3D interfaces available for 3D EPLAN, Solidworks, AutoCad Inventor, etc.	
Control features:	Graphic bending simulation, predefined shape library, material library, tool library, automatic calculation of length, automatic calculation of bending and length stop positions.	
Connection/ Backup:	Ethernet interface + USB port	
Hydraulic:	Most modern hybrid hydraulic reduces noise emissions and energy requirements.	

CNC / CAD Software

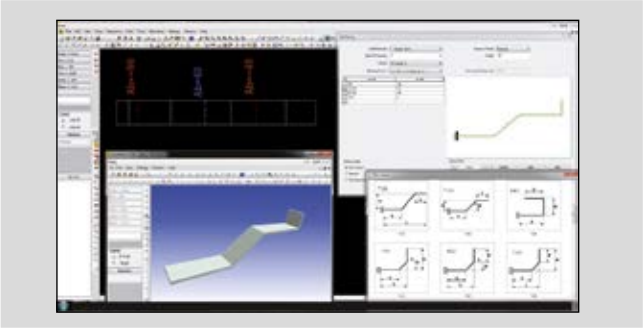

It is very easy to quickly program the Labod control on both the Boschert and Stierli machines.
Alternatively Boschert/Stierli offers CNC/CAD programming software from various different suppliers.

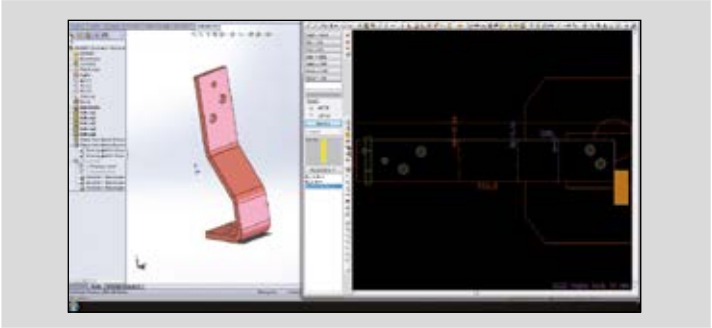

With these systems both the punching and bending machines can easily be programmed automatically from CAD files. Savings in time and material are significant.

Hydraulic Copper Shear CS

For the cutting of copper bars with no waste, the Boschert copper shears are perfect machines. Hold downs above and below the bar, minimal cutting angle and minimal clearance all add up to near-perfect cuts.

Cutting capacity:	7.875“ x ½“; 200 mm x 12 mm Copper 6“ x 0.59“; 150 mm x 15 mm Copper
Back Gauge Lengths:	0 – 40“; 0 – 1000 mm

BOSCHERT CU TWIST 120 NC

For production twisting of copper bars to exacting standards.
The controlled rotation ensures high repeatability.

max. width:	4 ¾“; 120 mm
max. thickness:	½“; 12 mm
max. Length:	variable mm
min. twist length:	ca. 2 x material width
possible twist angle:	0 - 110°

BOSCHERT ORIGINAL

Vertretung / Sales partner:

Magyarországi Forgalmazó:

Metal Trading&Consulting kft
8200 Veszprém Almádi út 3.
Telefon: 06/30/9934 814
info@mtckft.hu
WEB: www.mtckft.hu

10.2023